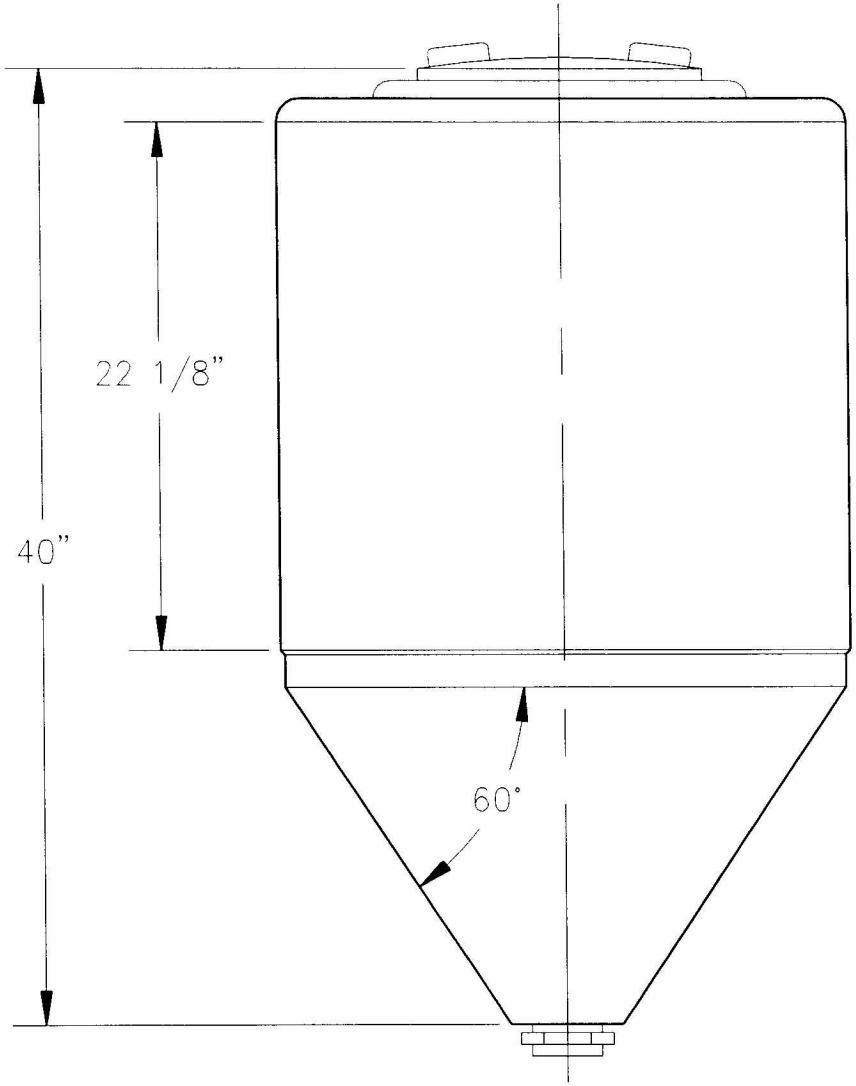

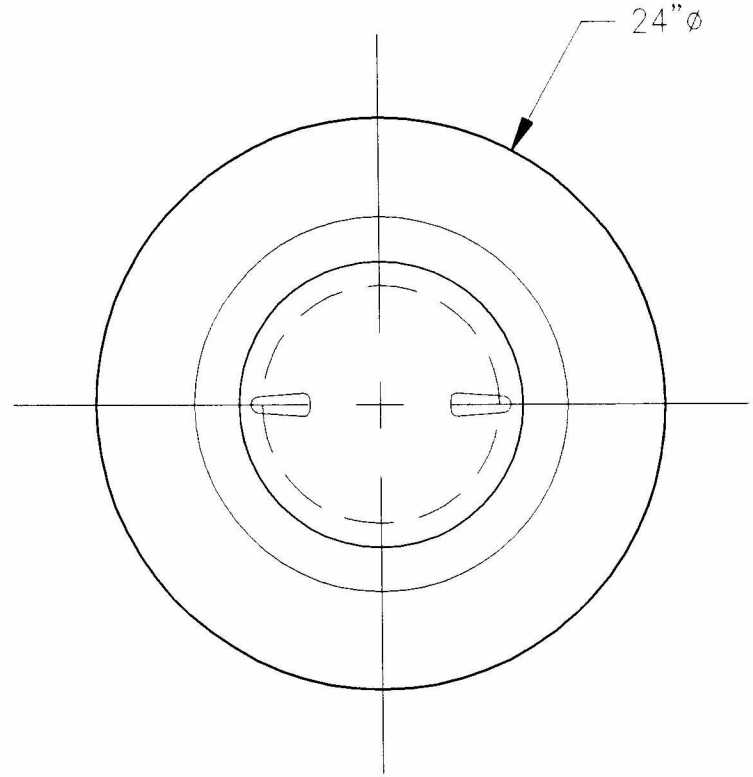

ADDITIONAL SIZES AVAILABLE

CAPACITY (GAL.)	DIAMETER	HEIGHT	CONE ANGLE	REFERENCE
65	30-1/4"	37"	30°	N-98

60 GALLON CLOSED TOP CONE BOTTOM TANK

IMG CORPORATION
P.O. BOX 383110
GERMANTOWN, TN 38183
(800) 327-1666

PART NO.: CCB-00060

DATE:	REFERENCE:	REV.:
3/7/03	C-30	.